RETRO-Fusion® 2.0 150

150W Incandescent Replacement LED Engine
120V • 230V • 240VAC

CANTOUSA
INNOVATIVE LIGHTING PRODUCTS

Energy efficient LED Light Engine

Designed to retrofit directly into existing fixtures.

The RETRO-Fusion 2.0 is a CSA listed retrofit kit that rapidly transforms existing inefficient incandescent fixtures into energy efficient LED fixtures. Our patented technology allows the fixture to smoothly dim from 0-100% utilizing existing dimming technology. Retrofit kits are available with a variety of options for both recessed and pendant style fixtures. Installation is as easy as changing a light bulb. Our LED technology creates even fields and delivers consistent color. The RETRO-Fusion 2.0 150 delivers more light than most 150 watt incandescent bulbs it replaces with only a 17 watt load.

Fairfax High School, Fairfax, Virginia
105 RETRO 500s at 3000K
Installed by Artistic Concepts Group

What the Fusion 2.0 IS

- More cost effective than fixture replacement
- Large lumen output for this market
- Listed for screw in replacement
- Field swappable tops
- Serviceable safety cable
- Dims on existing dimming systems with no additional installation of control system
- 0-100% dimming without flicker, pulse, or stepping
- 80+ High CRI
- Standard 5 Year Limited Warranty. An extended warranty of up ot 5 additional years can be added at the time of purchase

Electrical Data

- 17 Watts (17.5)
- Lumens 2103 @ 2700K
- Power Factor (PF) .9886
- Lumens per Watt: 120.17
- LM 70: >50,000 Hours
- CRI@2700K: 81.83,R9+3
- 1 lb 5.2 oz - 6 oz w/Reflector (.602 - .624 kg)

Applications

- 9 feet to 20 feet high ceilings (2.75 to 6 meter high ceilings)
- Where dimming is a key concern
- Where there is no desire or budget to replace existing fixtures
- Where access is limited
- Where a custom solution is required
- Where the ceiling cannot be disturbed

Typical Installations

- Auditoriums
- Churches and houses of worship
- Arenas
- Lobbies
- Museums
- Educational facilities
- Convention centers

Top Types

E26 - Edison
E11 - Mini Candelabra
E39 - Mogul *
BA15D *
Par Ring/Bare Wire
Bi-Pin
Custom Options

CCT Lumen Output

2700K: 2103 Lumens
3000K: 2217 Lumens
3500K: 2261 Lumens
4000K: 2314 Lumens
5000K: 2354 Lumens

Fixture Reflectors

Tall 11 Degrees
Tall 20 Degrees
Tall 47 Degrees
Short 15 Degree
Short 28 Degree
Short 56 Degrees
Short 74 Degrees
None 120 Degrees

Color Temp

2700K -
3000K - Standard
3500K -
4000K -
5000K -

Fixture Drawing

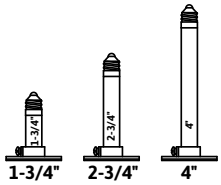

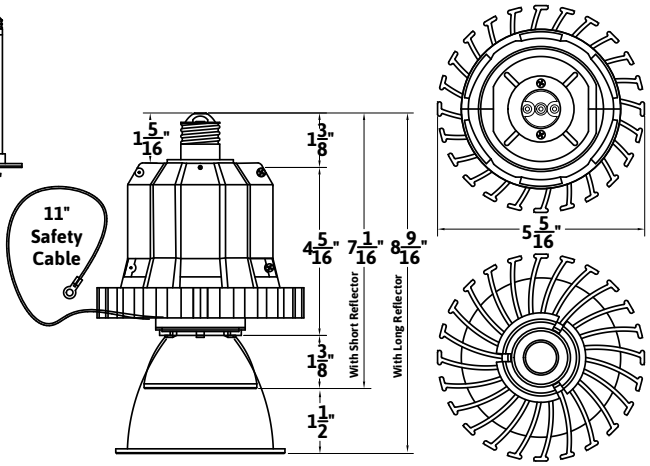

Short

Weight: 1lb 5.2oz w/Reflector
.602 kg w/Reflector

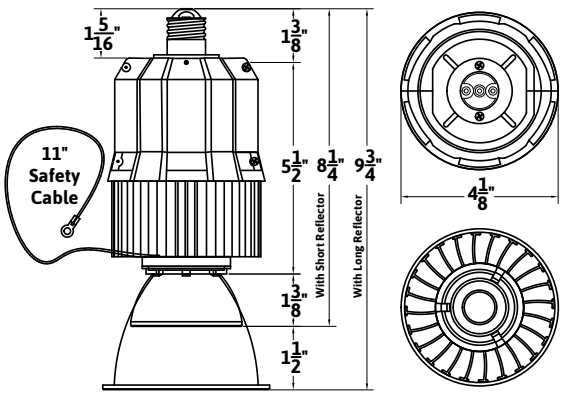

Tall

Weight: 1lb 6oz w/Reflector
.624 kg w/Reflector

ATTENTION: If your space has been designed with multiple RETRO models, please contact the factory to discuss fade and dimming options for your space.

1092 West Atlanta Street, SE • Suite 600 • Marietta, GA 30060 • 888-252-5912 • info@cantousa.com • cantousa.com

V 1.7 4/14/26

RETRO-Fusion® 2.0 150

150W Incandescent Replacement LED Engine
120V • 230V • 240VAC

CANTOUSA
INNOVATIVE LIGHTING PRODUCTS

Order Guide

1. RETRO

00 – F2 – [ ] – 150 – [ ] – [ ] – [ ]

LIGHT	VOLTAGE	FIXTURE TYPE	SINK SIZE	COLOR TEMP	CRI
F2	120	150	S (Short)	2.7K	80
	230		T (Tall)	3.0K	*90
				3.5K	*97
				4.0K	
				5.0K	

* Chips with a CRI greater than 80 are an additional 6 weeks beyond standard delivery

2. TOPS

00 – TOP – [ ] – [ ]

TOP	TYPE	LENGTH
TOP	E26	→ 1.35" or *CCC
	E11	→ 1.75", 2.75", 4.00" or *CCC
	BW (Bare Wire)	→ 12" min, increase in 6" increments

**Custom height in inches to the nearest 1/4" from the top fo the plate to the tip.*

3. REFLECTOR

00 – [ ] – [ ] – [ ]

REFLECTOR	DEGREE	SIZE
REF	15 →	T
	23 →	T
	46 →	T
	26 →	S
	40 →	S
	59 →	S
	70 →	S
ZOR (ZORYA)	25	

4. ADAPTER & EXTENDER OPTIONS

00 – [ ] – [ ]

TYPE	TYPE
ADP →	*BAYONET (BA15D)
ADP →	*MOGUL (E39 TO E26)
EXT →	1.25" or 2.5"

**E39 and BA15D require an E26 top with adapters used to make this unit compatible with these top types.*

5. DIFFUSERS

00 – DIF – [ ]

DIFFUSER	TYPE
DIF	SMALL (For Shorts)
	LARGE (For Talls)
	KIT (For Shorts and Talls)

Photometrics (R150) 3,000K

Multiplication Factor for Color Temperature

- to convert to 2,700 Kelvin - fc X .9488
- to convert to 3,500 Kelvin - fc X 1.0196
- to convert to 4,000 Kelvin - fc X 1.0439
- to convert to 5,000 Kelvin - fc X 1.0617

To Solve Footcandles Over A Distance

Peak Output ÷ (Distance X Distance)

To Solve Area Over A Distance

Distance X Mult.Factor

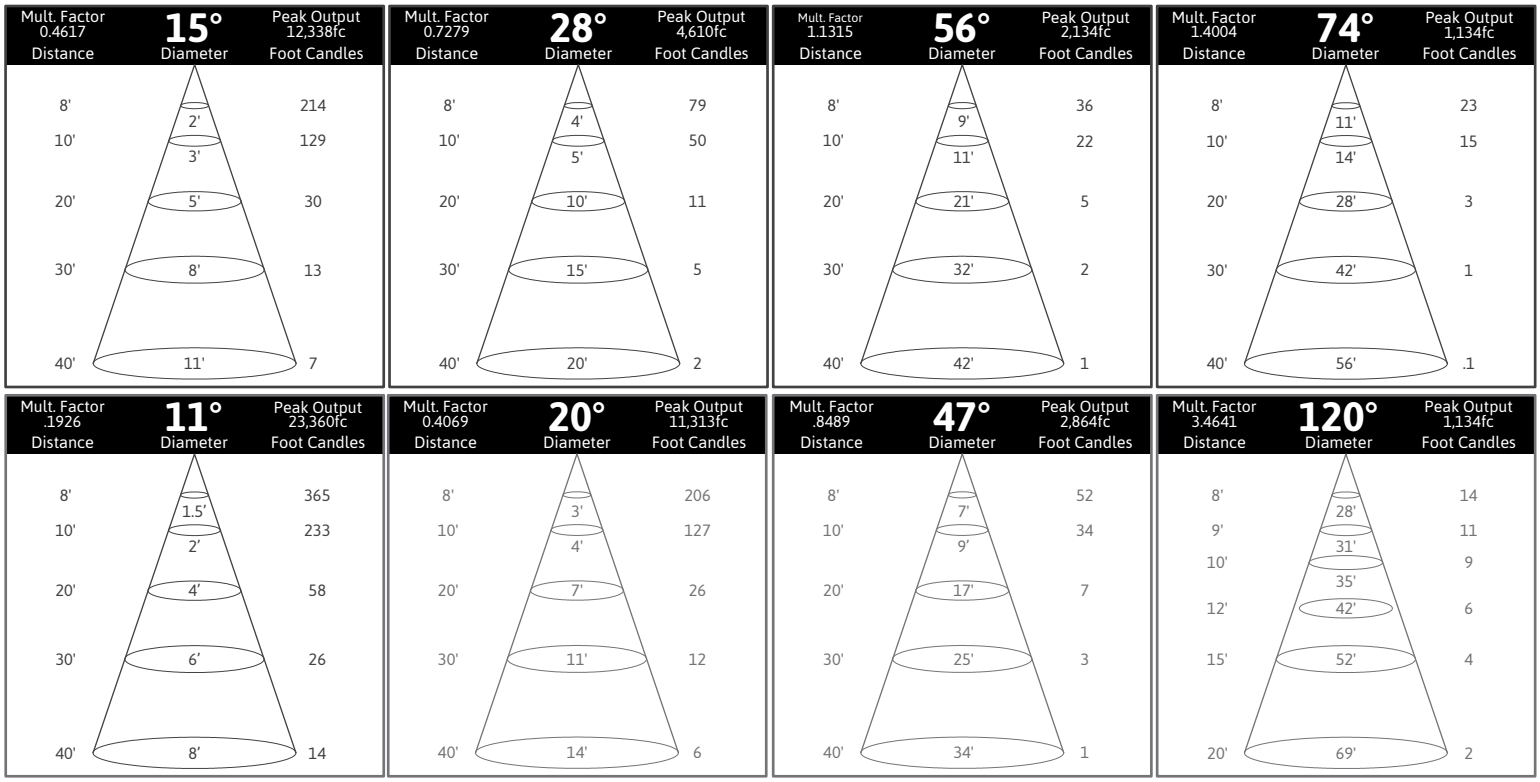

Contact your local representative or dealer for IES files.

ATTENTION: If your space has been designed with multiple RETRO models, please contact the factory to discuss fade and dimming options for your space.

1092 West Atlanta Street, SE • Suite 600 • Marietta, GA 30060 • 888-252-5912 • info@cantousa.com • cantousa.com

V 1.7 4/14/26